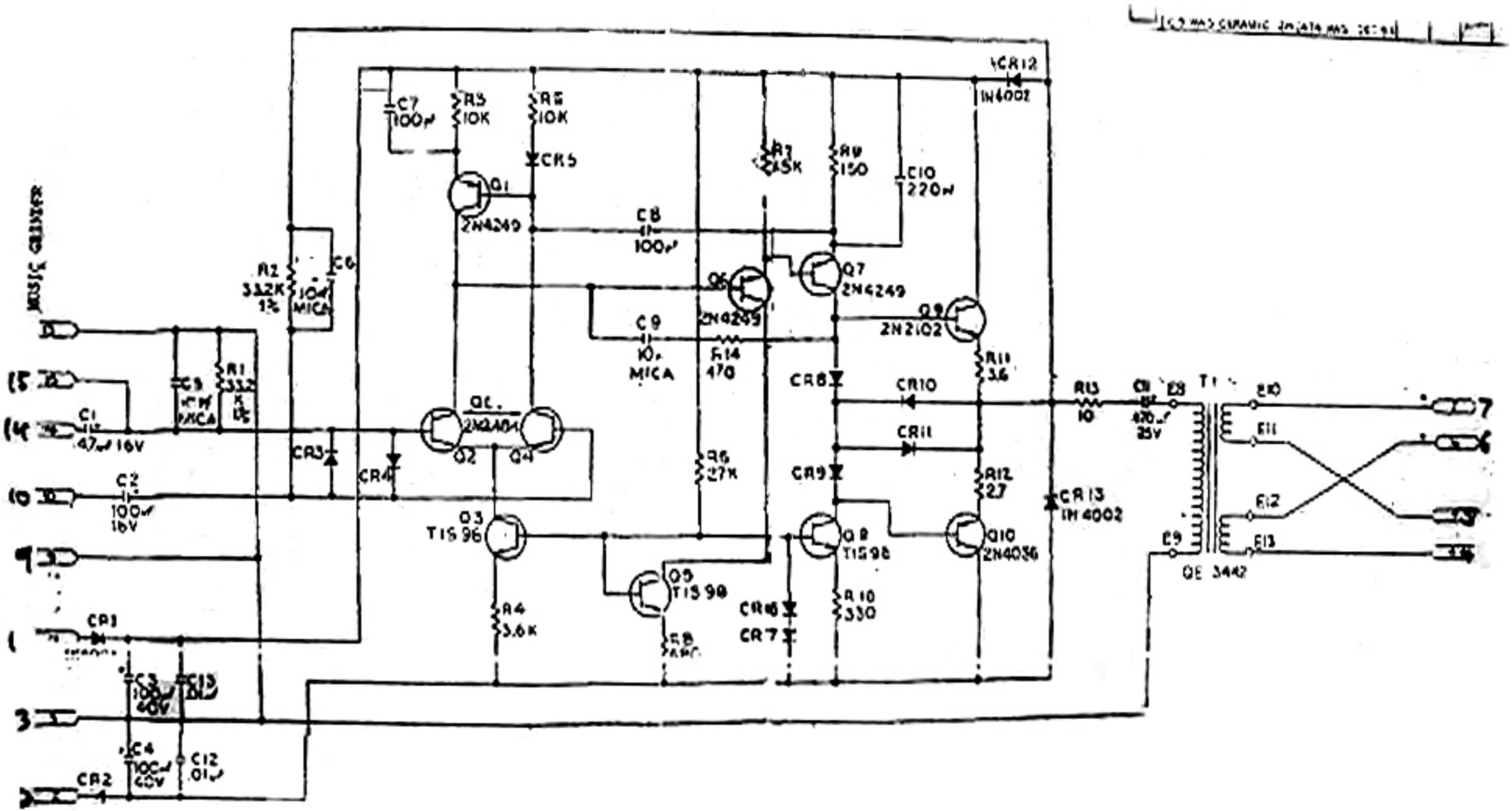
MUSIC CHIMER
C7 100µ
R5 10K
R6 10K
CR5
Q1 2N4249
C8 100µ
R7 45K
R8 150
C10 220µ
CR12 1N4002
R2 3.32K 1%
C6 10µ MICA
Q6 2N4249
Q7 2N4249
Q9 2N2102
C9 10 MICA
R14 470
R11 3.6
CR8
CR10
CR11
R13 10
C11 470µ 25V
T1
E10
E11
E12
E13
E9
QE 3442
C1 47µ 16V
C2 100µ 16V
C5 MICA
R1 332 1%
CR3
CR4
Q2
Q4
R6 27K
CR9
R12 2.7
CR13 1N4002
Q3 TIS 96
Q8 TIS 98
Q10 2N4036
Q5 TIS 98
R4 3.6K
R8 ARC
CR6
CR7
R10 330
CR1
C3 100µ 60V
C13 .01
C4 100µ 60V
C12 .01µ
CR2

REV.	
A	R10 WAS 3.[illegible]
B	ADDED ND
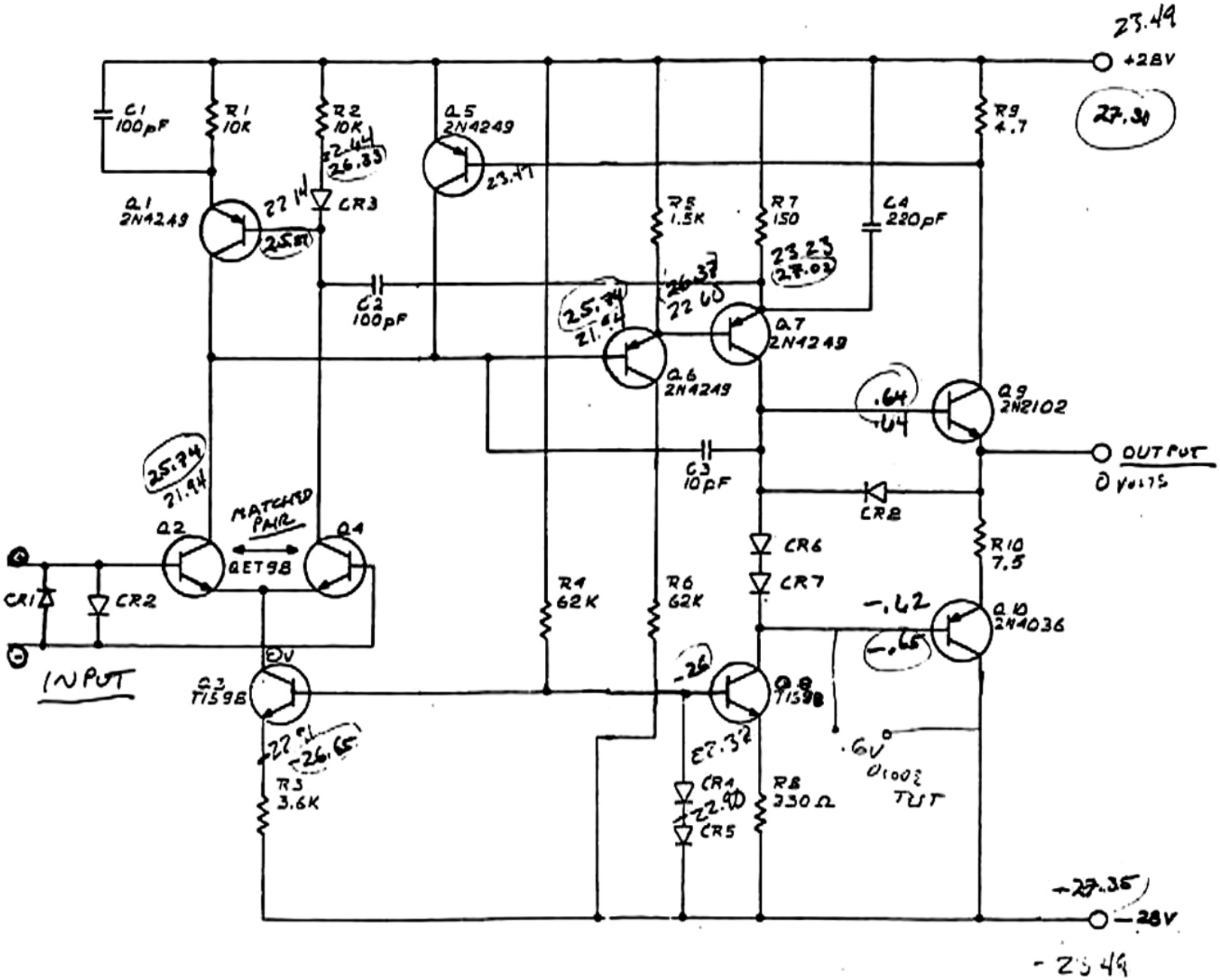
QUAD EIGHT
AM-10 SCHEMATIC