20618-910-002.00

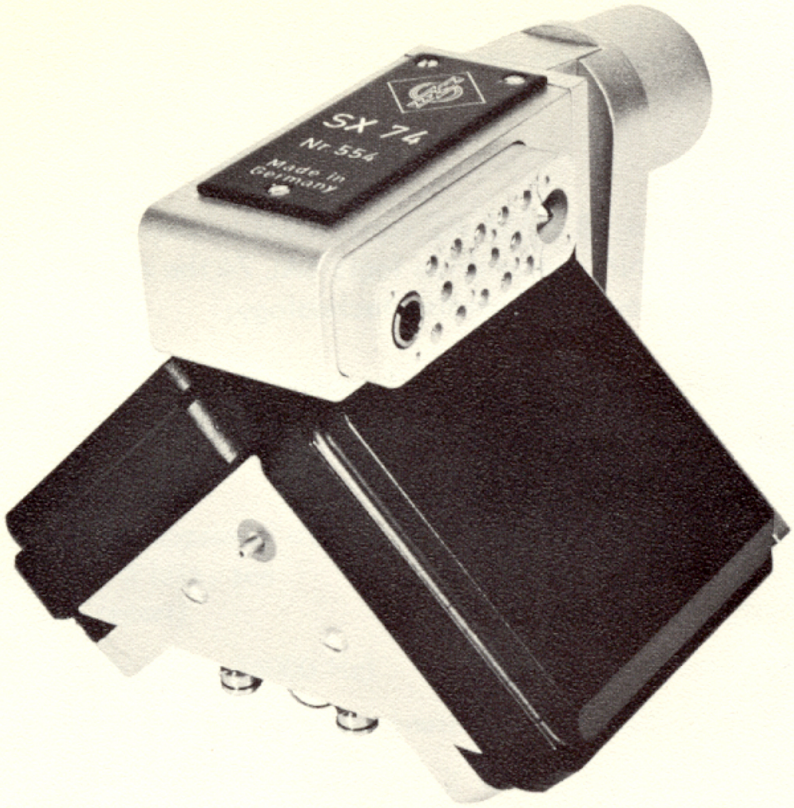

The dynamic stereo cutterhead SX-74 is an upgraded development of the model SX-68 which, since its introduction, has found widespread acceptance in the world's leading cutting operations and record companies.

This further development work was prompted by a desire to permit critical performance requirements made necessary by new cutting modes. The following performance parameters were changed compared to the SX-68:

1.) New magnetic field design resulted in a 1.4 dB sensitivity increase. As a result the SX-74 cutterhead requires 28 % less drive power in each channel for the same recorded signal.

2.) The maximum temperature tolerance of the cutterheads internal systems was raised from 120° C to 200° C. This was achieved using newly available materials.

AUDIO EXPORT GEORG NEUMANN & CO.

71 HEILBRONN/NECKAR FLEINERSTR. 29 POSTBOX 2120 TEL.: 8 22 75 TELEX: 728 558 CABLE: AUDIOEXPORT HEILBRONN

August 1973

Printed in Germany

3.) The protection against mechanical damage resulting from excessive power peak caused accelleration was expanded through structural changes of the moving systems. This permits the power reserves of the new electronic drive system to be more fully utilized.

4.) Further mechanical changes of the moving systems resulted in better agreement between stylus motion and feed back voltage above 15 kHz, At the same time a new electronic package (SAL 74) was developed to make full use of the power capabilities of this cutterhead.

Together with the NEUMANN cutter drive logic SAL 74 the cutter fulfills all of the important requirements of today's recording technology:

Linear response over the entire frequency range.

Highest channel separation

High feedback capability

Low distortion

Highest recording levels

Ease in operation

Long life with minimal maintenance and repair.

The SX 74 is equipped with two separate moving coil systems which are coupled in such a way that except for the primary resonance at approximately 1000 Hz, there are no resonances in the audible range. Linear frequency and phase response and stability result from the high feedback capability which effectively damps the armature's movement. A safety margin of several dB to the threshhold of instability is assured when the cutter is properly aligned.

Care was taken with regard to the vertical tracking angle to assure, on the one hand, a 15° angle to meet the DIN 45542 standard and, on the other hand, the desire of the International Electrotechnical Commission (in IEC Publication 98) to standardize an angle of $20^{\circ} \pm 5^{\circ}$. For this season the cutter was constructed to cut an 18° angle when correctly mounted. Lacquer springback is included in this calculation.

It is possible to cut high quality MONO-disks with the SX 74 at levels unattainable with MONO-cutterheads.

Helium can be injected into the gap. Helium's better heat conducting properties assures a more rapid draining of the heat generated at the drive coils. This insures extended cutter life at high driving currents.

The SX 74 cutterhead is delivered with the following accessories:

1 connection cable

1 alignment block

1 alignment ruler

1 stylus insertion and removal tool

In addition the use of the Special Microscope ZA 12/68 for inserting and orienting the stylus is recommended.

Technical Data (with SAL 74):

Frequency range	7 ... 25000 Hz
Frequency response (approx. 9 dB feedback at 5 kHz, see check out report)	15 ... 16000 Hz ± 0,5 dB 10 ... 20000 Hz ± 1 dB 7 ... 25000 Hz ± 3 dB
Channel separation (40...16000 Hz)	≧ 35 dB
Active feedback range	7 ... 14000 Hz
Feedback capability at 5 kHz	≧ 12 dB, typically 14 dB
Maximum velocity (lateral cut)	
at 10 kHz continuous operation	
without cooling	16 cm/s ≙ 1,3 A
with cooling	28,5 cm/s ≙ 2,3 A
Tonebursts (10 kHz) 10 ms Impulse	105 cm/s ≙ 8 A
Sensitivity at 10 kHz (single channel)	1 cm/s per 106 mA
Maximum stylus excursion	± 150 µm
DC resistance of the drive coil	approx. 4.7 ohm
Impedance at 10 kHz	approx. 7.5 ohm
Output of feedback coil	approx. 3.5 mV per cm/s
Weight	approx. 500 g (18 ozs.)
Cutting stylus model	74 KMH

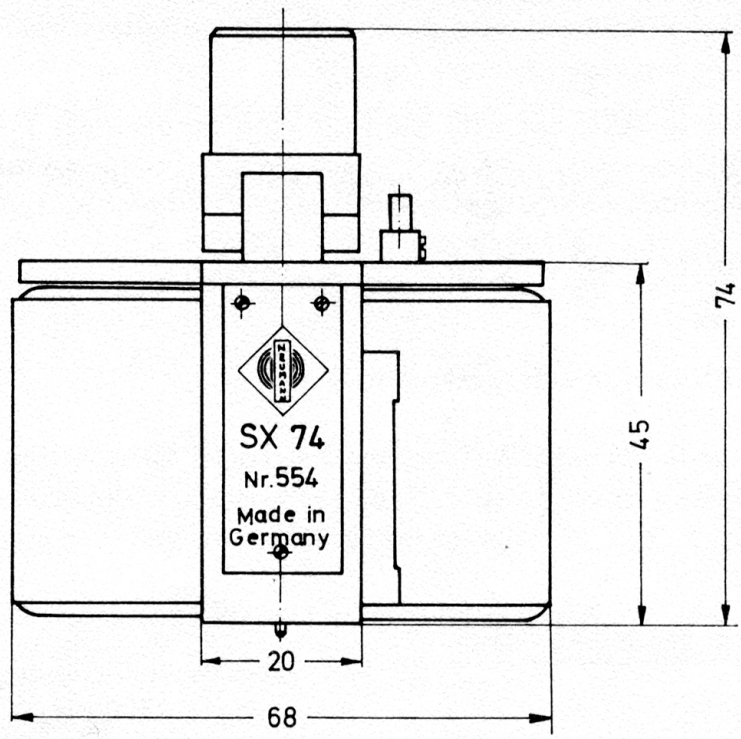

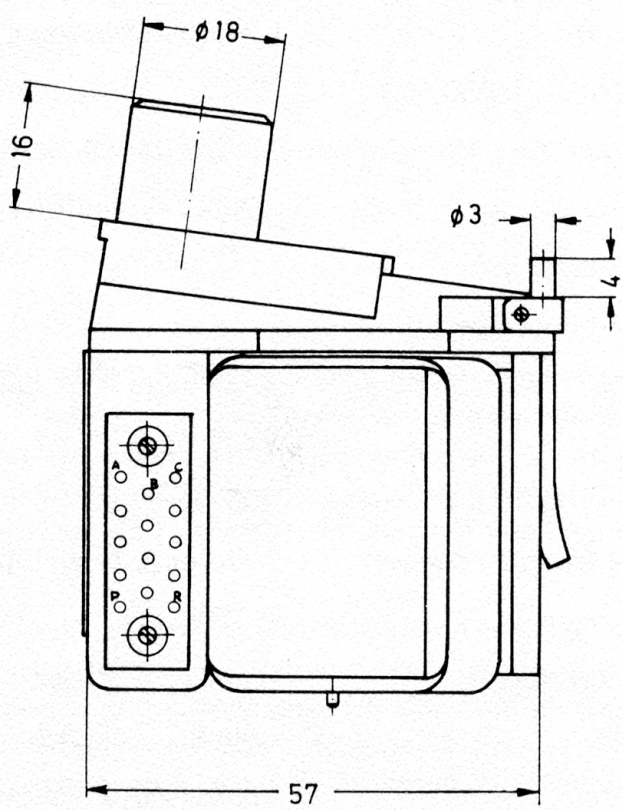

Dimensions in mm

1" = 25.4 mm