Multi-Way Mixer

Specification

Issue 6 - December 1967

CONTENTS

1. General

The mixer comprises six basic cassettes of the same size which can be assembled in combinations of various numbers to meet a wide range of requirements up to say a 24 input, 8 track mixer, provision being made so that two track stereo recording can be made simultaneously.

The Block Schematic is shown on Drawing No. TQ12345 DEI Issue 6.

2. Microphone Channel Cassette

2.1 Each microphone channel cassette contains two identical channels which may be used as a stereo pair or as two completely separate mono microphone channels.

2.2 Each mono microphone channel is provided with the following -

2.2.01 A screened input transformer with floating primary winding.

2.2.02 Input attenuator on secondary side of input transformer giving 12 steps of 3.1/3 dB to allow for input levels between - 40 and 0 dB. For levels below - 40 dB, e.g. for ribbon microphones, an external preamplifier will be used. For levels above 0 dB an external attenuator will be used. The control can also select any of two tape replay signals via a re-record selector in a Track Monitor Cassette or the oscillator signal.

2.2.03 Band pass filter giving a substantially flat characteristic from 30 Hz to 20 KHz. At the low frequency end the filter has a peak which counteracts the roll off of other couplings in the cassette. The magnitude of this peak is adjusted for optimum overall flatness of the frequency characteristic of the cassette.

2.2.04 Bass control 5 x 2 dB lift and cut. Half lift/cut at 500 Hz.

2.2.05 Treble control 5 x 2 dB lift and cut. Half treble cut at 2.5 KHz. Treble lift peaked at 5 KHz b = 2.5.

2.2.06 Limiter having a hold control, a recovery control, a compress/limit switch and meter (external).

2.2.07 The compress/limit switch will have a third position marked "OUT" in which the output of the internal limiter is disconnected and provision is made for an external unit to be included via a plug and socket at the back and a buffer unit which will be supplied with the mixer. A shorting plug is required when the injection facility is not in use.

2.2.08 Fader. Painton type EM2 having 30 steps of 0.5 dB followed by a graded law of 26 steps to - 64 dB and off.

2.2.09 Echo level control. Painton type M having 20 steps of 2 dB and OFF.

2.2.10 Echo channel switch. Selects one of four echo lines and OFF.

2.2.11 Cue level control.

2.2.12 Cue channel switch with OFF position which can take signal prior to fader and send it to either of two cue lines or to both simultaneously without introducing crosstalk. Any number of channels can send simultaneously to the cue lines which will have line output amplifiers in the control room monitor cassette and power amplifiers in the mains unit (see 9.3 below). Either of the cue channels can, if desired, be used to provide a pre-hear facility.

2.2.13 Pan control giving full left, full right and 19 intermediate positions.

2.2.14 Cassette selector. This is a two gang switch which handles A and B outputs of the pan control simultaneously and connects them to groups or main channels as shown in the block schematic drawing. Positions MON 1A-4B can be used to feed to the monitor channel when the signal is being recorded without echo. In this case the channel in question is being used as an echo return, for monitoring purposes only.

2.3 Each microphone channel cassette also has the following -

2.3.1 A 5 pin Tuchel socket for the two inputs.

2.3.2 Stereo pair/mono switch.

This transfers the outputs of the faders from the pan controls to a spreader the output of which is simultaneously switched to the L.H. cassette selector. The R.H. cassette selector becomes inoperative. A third position maintains stereo pair connection and inter-connects the control signals of the two limiters so that the instantaneously greater signal controls both channels.

2.3.3 A spreader with a range of control equivalent to + 4 dB to - 12 dB, in 2 dB steps.

3. <u>Group Cassette (2 channel)</u>

This contains the following -

3.1 Limiters, 2 off, with external meters, as 2.2.06 and 2.2.07 together with a switch for providing optional linking of the control signals.

3.2 Faders, 2 off as 2.2.08.

3.3. Presence controls, 4 off; 2 (dB presence) giving 5 steps of 2 dB lift and cut, and 2 (KHz presence) giving eight frequencies: 0.5, 0.8, 1.2, 1.8, 2.8, 4.2, 6.5 and 10 KHz.

3.4. Main channel selectors, 2 off.

3.5 Main echo level controls, 2 off (as 2.2.09) and echo line output amplifiers, 2 off.

3.6 Five-pin Tuchel socket for echo outputs, 1 off.

3.7 Band pass filters, 2 off, as 2.2.03.

4. <u>Main Channel Cassette (2 channel)</u>

This contains:-

4.01 Faders, 2 off as 2.2.08.

4.02 Track announce buttons, 2 off which also mute the monitor loudspeakers. (Turn to look).

4.03 VU meter switch 1 off (2 gang) giving the choice of -

1. OFF
2. Record - Replay
3. Echo send.
4. Studio playback.
5. Inputs to main channels.
6. Inputs to group channels.
7. External measurements.
8. Oscillator.

4.04 VU meter amplifiers, 2 off, each with a nonlocking "Boost 20 dB" button, giving 20 dB extra gain when pressed.

4.05 Band pass filters, 2 off as 2.2.03.

4.06 Output amplifiers, 2 off.

4.07 Output sockets, 2 off, 5 pin Tuchel, in parallel.

4.08 Presence controls as 3.3.

4.09 Injection sockets (to have shorting plugs when not in use), 2 off.

4.10 Cue channel switches, 2 off, with 2 separate cue level controls for each main channel.

4.11 Five-pin Tuchel socket, connected to VU meter switch.

4.12 Auxiliary stereo level controls, 2 off and pan controls, 2 off (as 2.2.09 and 2.2.13) which feed the auxiliary stereo bus lines.

5. Track Monitor Cassette (4 channel)

Each track monitor cassette contains:-

5.1 Input sockets, 4 off, 5 pin Tuchel.

5.2 Replay selectors 2 off, each to select any of the four pairs of inputs.

5.3 Re-record selectors, 2 off, each to select any of the above four pairs of inputs, and feed them to microphone inputs via the input switch/attenuators 2.2.02.

5.4 Track monitoring level controls, 4 off, as 2.2.09.

5.5. Pan controls, 4 off, as 2.2.13.

5.6 Echo channel switches, 4 off, as 2.2.10.

5.7 Echo level controls, 4 off, as 2.2.09.

5.8 Band pass filters, 4 off, as 2.2.03.

6. Control Room Monitor Cassette (Twin Channel)

This contains the following -

6.01 Switch, 2 pole 4 position, selecting either of two pairs of 4 - track monitor bus bars or these two pairs of bus bars in parallel or auxiliary stereo.

6.02 Two 5 position switches (Left and Right) - "OFF, Synchronous Replay, Normal, Cue 1, Cue 2".

6.03 Correlator Meter Switch, 1 off (2 gang). This has an off position and gives the choice of correlation of -

Monitor Pair

1A and 1B

2A and 2B

3A and 3B

4A and 4B

5A and 5B

6A and 6B

With the exception of the Monitor Pair position, correlation is indicated at the points of connection of the relevant VU meters.

6.04 Correlator circuitry (meter external).

6.05 Noise indicating circuitry (meters external). This enables the noise or signal levels in the two channels selected by the correlator Meter Switch to be indicated on a pair of meters when the level is in the range of - 60 to - 40 dB. During normal recording these meters will remain hard over.

6.06 Control Room Monitor level control (2 gang) type BM, calibrated + 20 to - 20 in 2 dB steps.

6.07 Control Room Loud speaker switch. This provides for -

Both speakers off.

Both channels on left speaker.

Both channels on right speaker.

Channels on corresponding speakers (Stereo).

Both speakers on channels in parallel.

6.08 Pole right loud speaker button (non-locking) which reverses phase of the right channel prior to the point to which the correlator can be switched.

6.09 Loud speakers quiet key which reduces level from both speakers 20 dB.

6.09.1 Preset loud speaker quiet gain trimmer "Operator".

6.09.2 Preset loud speaker quiet gain trimmer "Artist Manager".

6.10 Loud speaker mute buttons, 2 off, spring return, to mute left and right speakers.

6.11 Record/replay key.

6.12 VU Meter Key Switch marked "Follow/Replay" which transfers the VU Meter inputs from the output of the Record/Replay key to the track monitor input.

6.13 "Synchronous replay level to Cue" controls, 2 off, marked "Cue 1", "Cue 2".

6.14 Main cue level controls, 2 off, as 2.2.09.

6.15 Cue line output amplifiers, 2 off.

6.16 Five-pin Tuchel socket for cue lines.

6.17 Loudspeaker line output amplifiers, 2 off.

6.18 Five-pin Tuchel socket for monitor loudspeaker amplifiers.

6.19 Band pass filter, 2 off as 2.2.03.

7. <u>Studio Playback Cassette (Twin Channel)</u>

This contains the following -

7.01 Two 5 position switches (Left and Right) - "OFF, Synchronous Replay, Normal, Cue 1, Cue 2".

7.02 Oscillator.

7.02.1 Oscillator frequency control giving 0.06, 0.1, 0.5, 1, 5, 8, 10, 12 or 15 KHz.

7.02.2 Oscillator level control (as 2.2.09).

7.02.3 Oscillator output socket, 5-pin Tuchel.

7.03 Oscillator key switch.

7.04 Studio playback level control (2 gang) type BM, calibrated +10 to - 30 in 2 dB steps, electrically identical to Control Room Monitor level control (6.06).

7.05 Studio loud speaker switch, as Control Room Monitor loud speaker switch (6.07).

7.06 Pole right loud speaker button (non-locking).

7.07 Microphone sockets, 2 off, for operator and artist manager microphones.

7.08 Studio talkback push-buttons (locking) marked "Normal" and "Loud" (each with a gain trimmer adjustable from the top) which also mute the monitor loudspeakers. (Both to be pressed for "Loud").

7.09 Talkback microphone limiter.

7.10 Intercom key (with gain trimmer) for operator to speak on interoom circuit.

7.11 Loudspeaker key, 3 position, locking to give talkback on the studio loudspeakers or talkback or an alternative loudspeaker with or without muting of the studio loudspeakers.

7.12.1 Artist manager 3 position switch, marked "Normal, Cue 1, Cue 2".

7.12.2 Artist manager cue level controls, marked cue 1, cue 2.

7.13 Buzzer switch (spring return).

7.14 Red light switch (turn to lock).

7.15 Five-pin Tuchel socket for synchronous replay.

7.16 Loudspeaker line output amplifiers, 2 off.

7.17 Five-pin Tuchel socket for studio playback.

7.18 Five-pin Tuchel socket for alternative talkback and intercom.

7.19 Band pass filters, 2 off, as 2.2.03.

8. Impedances, Levels, etc

8.1 Input

The microphone channel (bridging) inputs will accept levels between - 40 dB and 0 dB with respect to 0.447 V from a source of 200 ohms.

The input will be floating so the source may be balanced or unbalanced.

8.2 Output

Each output will deliver a signal at nominal level of 0 dB from a source impedance of 200 ohms or less into a bridging load (2,000 ohms or greater). The overload point will be at least 15 dB above this level.

8.3 Internal

The internal levels and impedance will be chosen to suit the requirements.

8.4 Faders

The normal working position of each microphone, group or track fader will be at - 5 dB, marked 0 on scale.

9. Power Supply

9.1 Each cassette will be provided with a rectifier/stabiliser unit which will operate from a 50V, centre point earthed, 50 or 60 Hz input.

9.2 The 50V input will be provided by a constant voltage transformer feeding a step-down transformer. In order to avoid magnetic injection of hum, these will be in a unit located some distance from the mixer. The standard unit will be available for 200/260V, 50 Hz supply mains. Other units will be required for other voltages or frequencies.

9.3 The power unit will also contain two one output amplifiers each of which will drive several pairs of headphones or a small loudspeaker. Two more similar amplifiers are included for intercom and alternative loudspeaker circuits.

9.4 The power consumption is about 5 watts per cassette.

10 Installations

Frames could be made to accommodate any desired numbers of cassettes but the following should meet most requirements.

10.1 Small frame to house up to 12 cassettes. A typical installation in this would be as follows:-

6 Microphone cassettes giving 12 microphone channels.
2 Group cassettes giving 4 group channels.
1 Main cassette giving 2 main channels.
1 Track monitor cassette.
1 Control room monitor cassette.
1 Studio playback cassette.

The overall width of this is 40½" and it weighs about 250 lbs.

10.2 Large frame to house up to 24 cassettes. A typical installation in this could be as follows:-

12 Microphone cassettes giving 24 microphone channels.
2 Group cassettes giving 4 group channels.
5 Main cassettes for 8 - track plus auxiliary stereo recording.
3 Track monitor cassettes.
1 Control room monitor cassette.
1 Studio playback cassette.

The overall width of this is 79½" and it weighs about 500 lbs.

M.T. TERRY

5th January, 1968

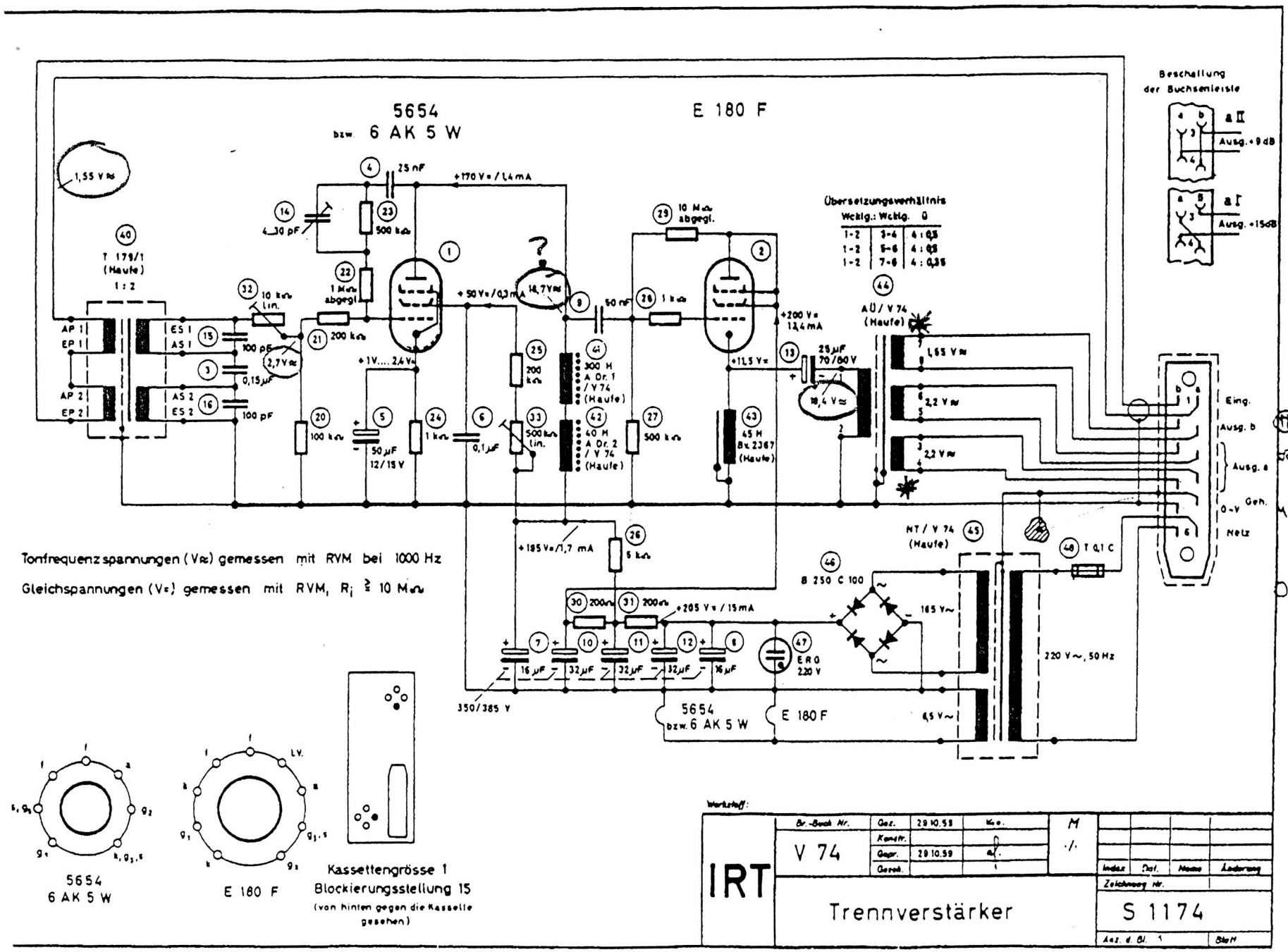

V 74
Ausgabe 1
Blatt 8

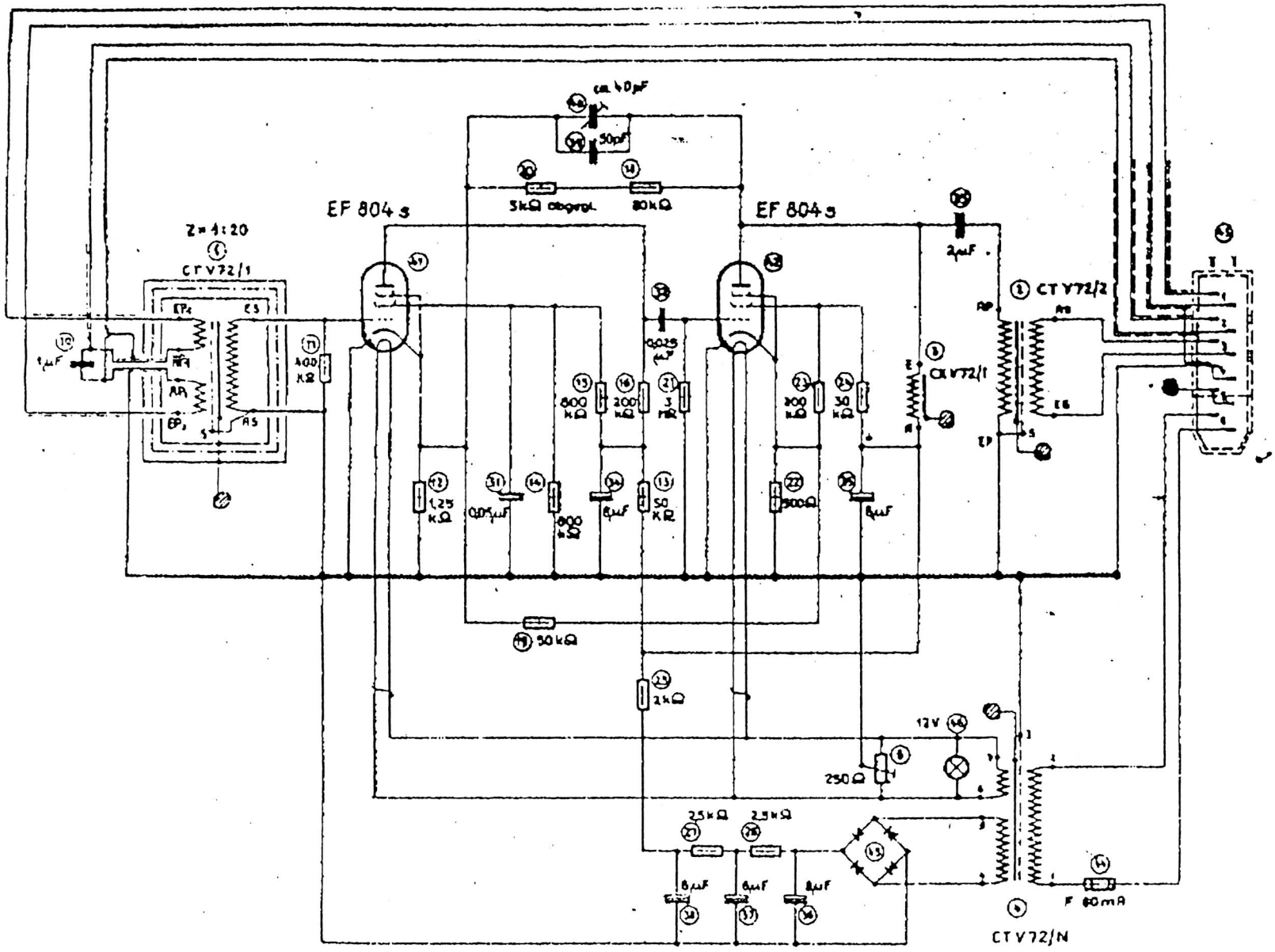

Gilt ab Gerät Nr. 10

EF 804 s

Nennspannungen der				
Netzanschlusses	Netzkondensatoren		HF-Kondensatoren	Elkos
100V~	3V~	230V	230V	450V
Pos 35	Pos 30	Pos 31, 32	Pos 33	Pos 34, 35, 36, 37, 38

V72

Studioverstärker

S 847

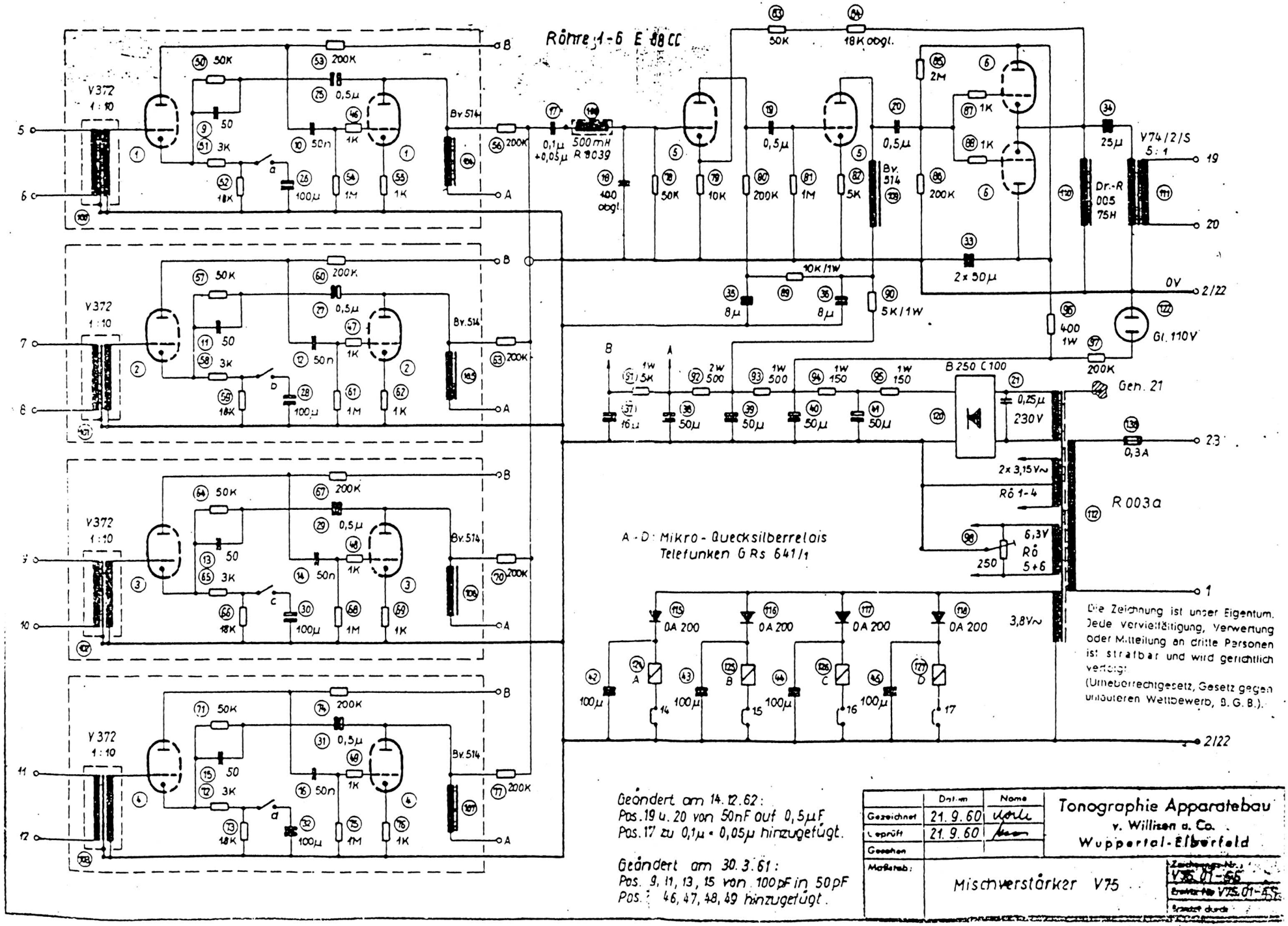
Röhre 1-6 E 88 CC
V372
1:10
Bv 514
V74/2/S
5:1
Dr.-R
005
75H
Gl. 110V
B 250 C100
Gen. 21
R 003a
Rö 1-4
Rö 5+6
6,3V
2x 3,15V~
3,8V~
0A 200
A - D: Mikro - Quecksilberrelais
Telefunken G Rs 641/1
0V
2/22
23
1
Die Zeichnung ist unser Eigentum. Jede Vervielfältigung, Verwertung oder Mitteilung an dritte Personen ist strafbar und wird gerichtlich verfolgt (Urheberrechtsgesetz, Gesetz gegen unlauteren Wettbewerb, B. G. B.).
Geändert am 14.12.62:
Pos. 19 u. 20 von 50nF auf 0,5µF
Pos. 17 zu 0,1µ + 0,05µ hinzugefügt.
Geändert am 30.3.61:
Pos. 9, 11, 13, 15 von 100pF in 50pF
Pos. 46, 47, 48, 49 hinzugefügt.
Datum
Name
Gezeichnet 21.9.60
Geprüft 21.9.60
Gesehen
Maßstab:
Tonographie Apparatebau
v. Willisen u. Co.
Wuppertal-Elberfeld
Mischverstärker V75
V75.01-66
V75.01-55