LANGEVIN MFG. CORP.

MODELS 101, 101-A, 101-B, 101-C

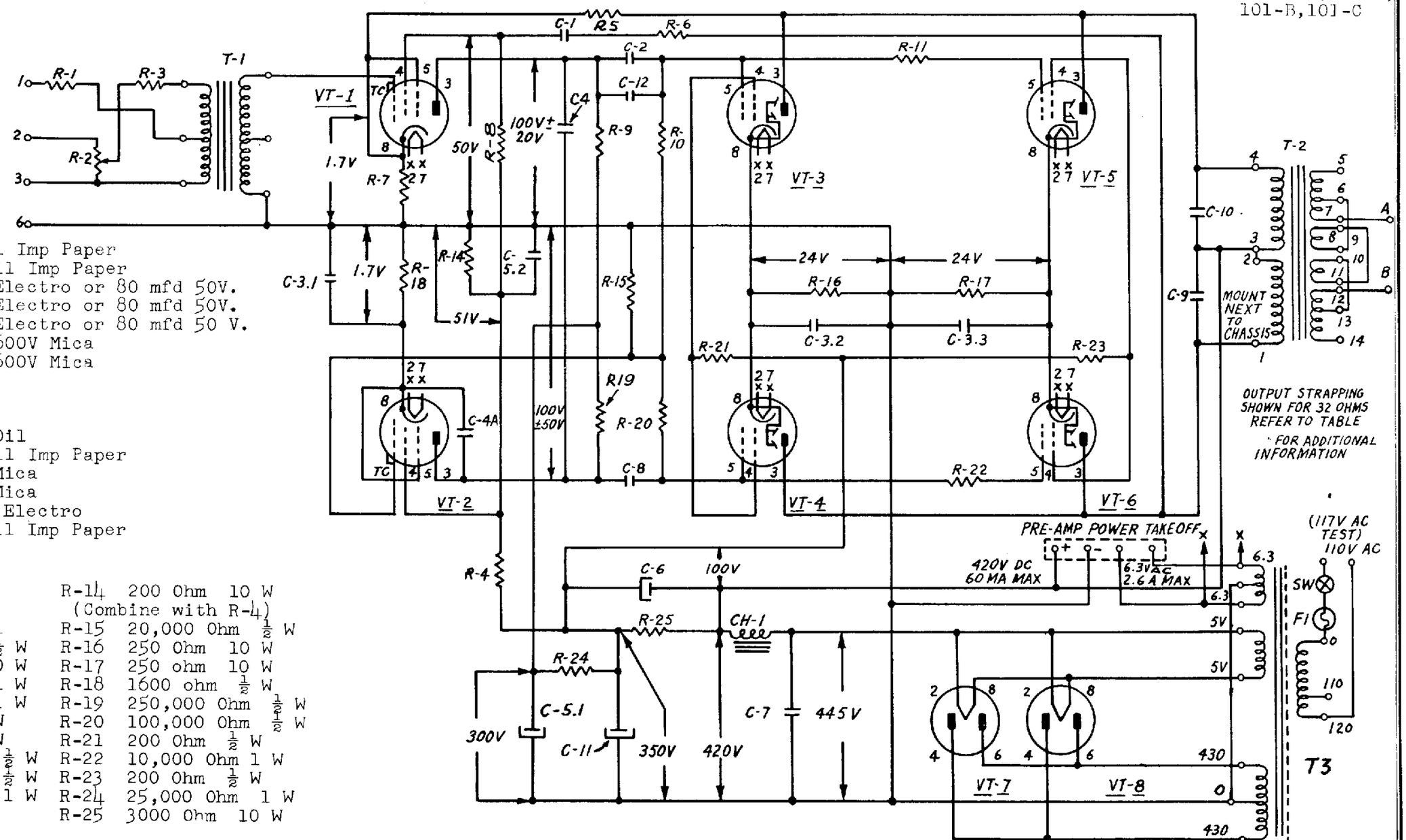

TUBES

VT-1	6J7 or 6SJ7
VT-2	6J7 or 6SJ7
VT-3	6L6G
VT-4	6L6G
VT-5	6L6G
VT-6	6L6G
VT-7	5Z3 or 5U4G
VT-8	5Z3 or 5U4G

CONDENSERS

C-1	.05 600V Oil Imp Paper
C-2	.01 1000V Oil Imp Paper
C-3.1	40 mfd 150 Electro or 80 mfd 50V.
C-3.2	40 mfd 150 Electro or 80 mfd 50V.
C-3.3	40 mfd 150 Electro or 80 mfd 50 V.
C-4	.00005 mfd 600V Mica
C-4A	.00005 mfd 600V Mica
C-5.1	20 mfd 450V
C-5.2	20 mfd 450V
C-6	40 mfd 450V
C-7	4 mfd 600V Oil
C-8	.01 1000V Oil Imp Paper
C-9	.004 5000V Mica
C-10	.004 5000V Mica
C-11	80 mfd 450V Electro
C-12	.01 1000V Oil Imp Paper

RESISTORS

R-1	300 Ohm ½ W	R-14	200 Ohm 10 W (Combine with R-4)
R-2	25,000 Audio Taper Control	R-15	20,000 Ohm ½ W
R-3	12,500 Ohm ½ W	R-16	250 Ohm 10 W
R-4	10,000 Ohm 10 W	R-17	250 ohm 10 W
R-5	500,000 Ohm 1 W	R-18	1600 ohm ½ W
R-6	100,000 Ohm 1 W	R-19	250,000 Ohm ½ W
R-7	1000 Ohm ½ W	R-20	100,000 Ohm ½ W
R-8	3600 Ohm ½ W	R-21	200 Ohm ½ W
R-9	250,000 Ohm ½ W	R-22	10,000 Ohm 1 W
R-10	100,000 Ohm ½ W	R-23	200 Ohm ½ W
R-11	10,000 Ohm 1 W	R-24	25,000 Ohm 1 W
		R-25	3000 Ohm 10 W

CHOKE

CH-1 100 Ohm DC (208-A) OR (200-B)

TRANSFORMERS

T-1	Input (400-C)
T-2	Output: (See Note T-2)
T-3	Power (100-A)

FUSTAT

F-1 2.5 Amp.

OUTPUT TRANSFORMERS CONNECTIONS (OUTPUT A-8)

NOMINAL LOAD IMPEDANCE	STRAP TERMINALS
600Ω	5-9, 8-11, 10-14
150Ω	5-9, 7-11, 8-12, 10-14
32Ω	6-9, 8-11, 8-10-13
16Ω	6-9-11, 8-10-13
8Ω	6-8-11-13, 7-9, 10-12
2Ω	6-8-10-12, 7-9-11-13

INPUT CONNECTIONS

USE	NOMINAL IMPEDANCE	WORKING RANGE	INTERNAL IMPEDANCE	GAIN OF AMP	TERMINALS #3 COMMON SEE NOTE	VOL CONTROL IN CIRCUIT
HIGH GAIN	600Ω	0-1000Ω	1500Ω	61 db	1-3	no
BRIDGING	2500Ω	0-2500Ω	25000Ω	46 db	2-3	yes

NOTE; When bridging connection is used - strap 3 to 6

MODELS 101,101-A,
101-B,101-C

LANGEVIN MFG. CORP.

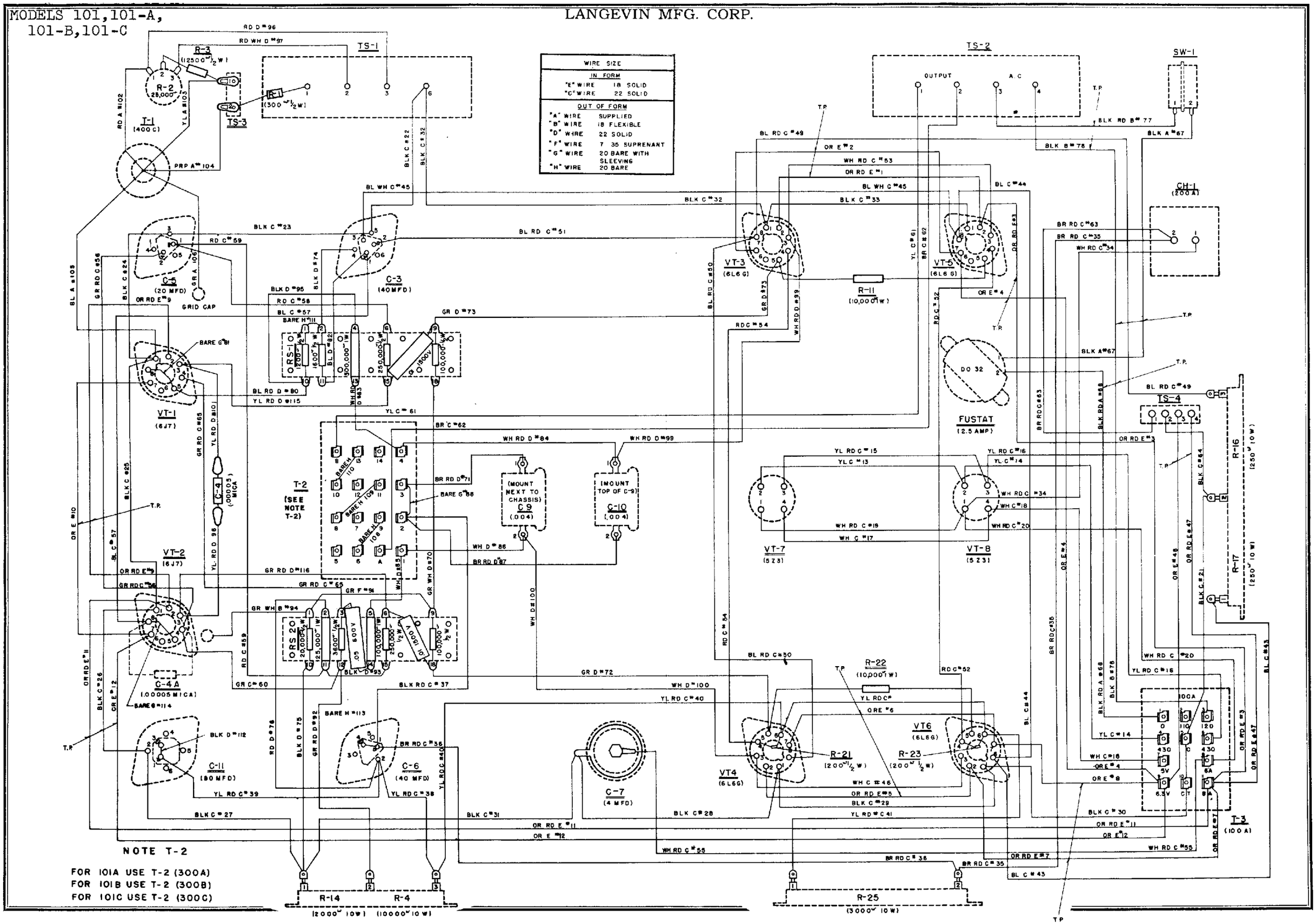

NOTE T-2

FOR 101A USE T-2 (300A)
FOR 101B USE T-2 (300B)
FOR 101C USE T-2 (300C)

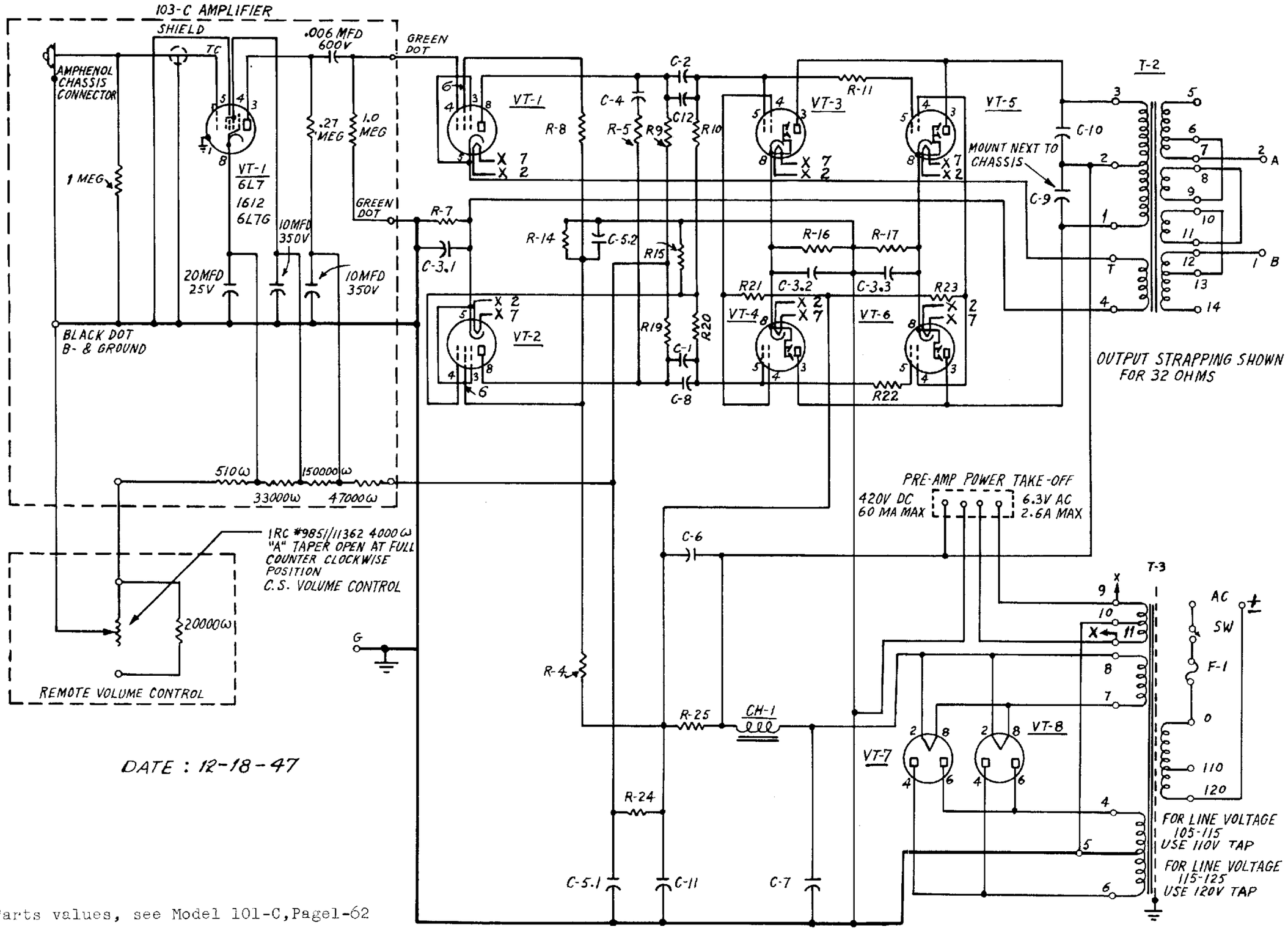

For Parts values, see Model 101-C,Page1-62

TYPICAL ELECTRICAL CHARACTERISTICS:

Gain: Full power output (+47 DBM) with approximately 25 M.V.input.

Operates From: Crystal microphone or other high impedance, low level source.

Operates Into: Load impedance of 1-1000 Ohms.

Output Power: Approximately 50 watts +47 DBM with less than 5% RMS total harmonic distortion from 100 to 5000 cycles.

Output Noise: 57 db below +47 DBM output (10 db below .001 watt).

FREQUENCY CHARACTERISTIC:

Production run ± 1.5 db over the range 50-10,000 cycles, operating from a source impedance of 100,000 ohms.

Volume Control: The volume control is a 4000 ohm high gain control in the cathode circuit of the input tube with 40 db range.

Power Consumption: 230 VA maximum at 120 Volts.

EXTERNAL CONNECTIONS

INPUT TERMINALS	TERMINAL CONNECTIONS
Amphenol Connector	High impedance input
G	Ground

OUTPUT TERMINALS	
1-2	2-600 Ohms nominal. Working Range 1-1000 Ohms.

Different output impedances are available by changing output transformer strapping as follows:-

NOMINAL OUTPUT IMPEDANCE	WORKING RANGE	STRAP
600 Ohms	1000-300 Ohms	5-9, 8-11, 10-14
150 Ohms	70-300 Ohms	5-9, 7-11, 8-12, 10-14
32 Ohms	20- 70 Ohms	6-9, 8-11, 10-13
16 Ohms	10-20 Ohms	6-9-11, 8-10-13
8 Ohms	3- 10 Ohms	6-8-11-13, 10-12, 7-9
2 Ohms	1- 3 Ohms	6-8-10-12, 7-9-11-13

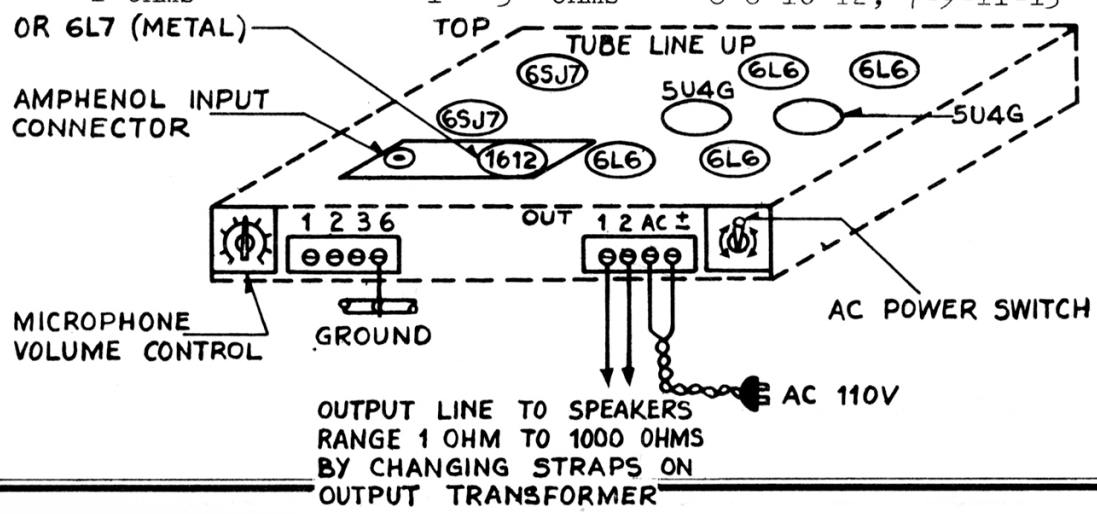

MODEL 3101-C

LANGEVIN MFG. CORP.

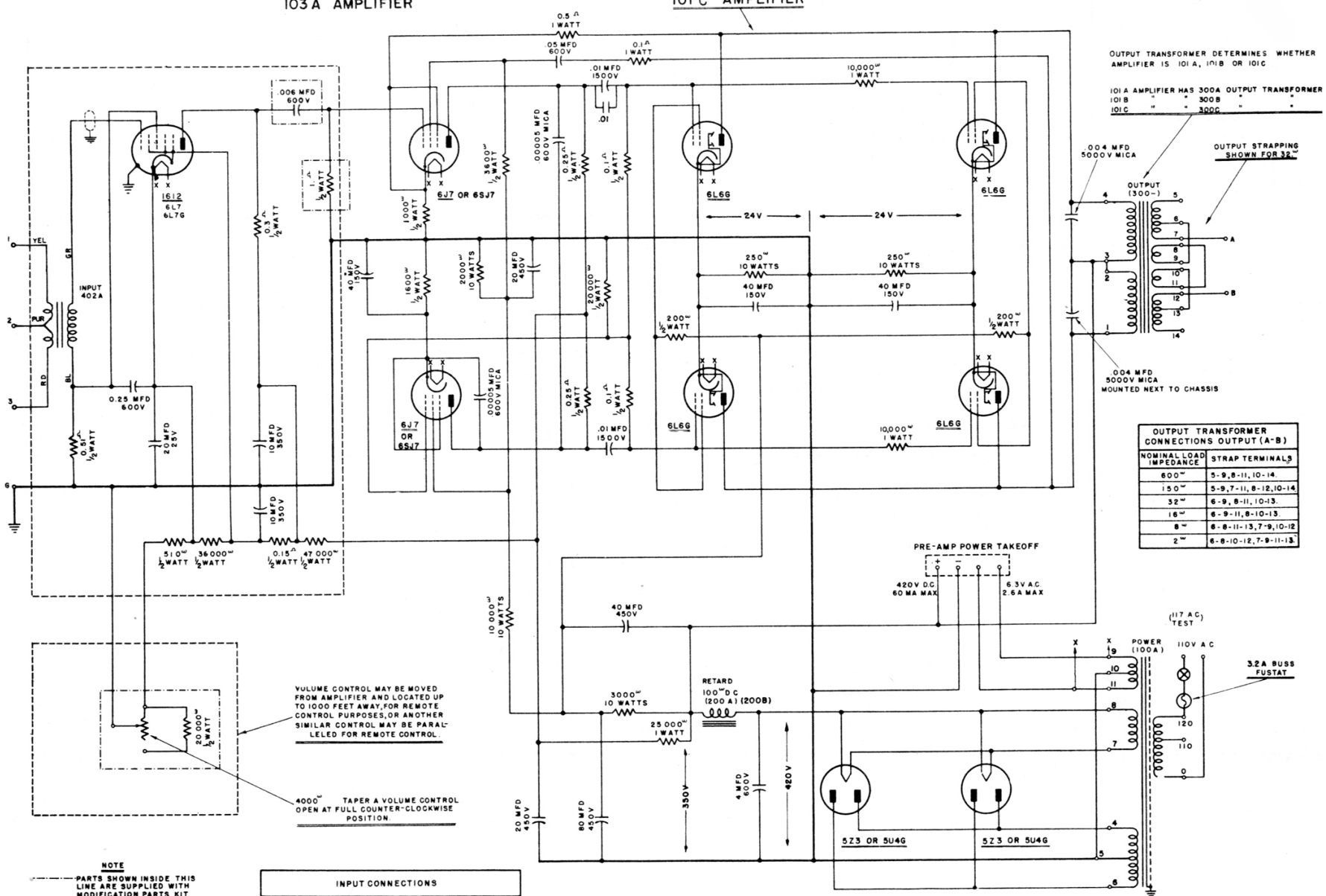

OUTPUT TRANSFORMER CONNECTIONS OUTPUT (A-B)	
NOMINAL LOAD IMPEDANCE	STRAP TERMINALS
600Ω	5-9, 8-11, 10-14.
150Ω	5-9, 7-11, 8-12, 10-14
32Ω	6-9, 8-11, 10-13.
16Ω	6-9-11, 8-10-13.
8Ω	6-8-11-13, 7-9, 10-12
2Ω	6-8-10-12, 7-9-11-13.

INPUT CONNECTIONS				
TERMINAL NO	NOMINAL IMPEDANCE	WORKING RANGE	AMP GAIN	GAIN CONTROL RANGE APPROX.
3-2	30Ω	15Ω-60Ω	105 DB	40 DB
3-1	120Ω	60Ω-250Ω	105 DB	40 DB

USE #3 AS COMMON OR ±