1570B Amplifier

1570B

Features

175 watts

Insured continuity of service

Low power consumption

Compact

Wide frequency range

Low distortion

Economical installation

Low cost per watt

Oil-filled condenser

Center-tapped transformer for simplexing speech lines

Conservative tube operation

The Altec 1570B Power Amplifier is a high powered, highly efficient public-address amplifier. It is designed for quality performance, high reliability, and economical operation. With a nominal rating of 175 watts, it delivers more undistorted, wide-range power per dollar invested than any other amplifier. With this exceedingly high continuous output capability, the 1570B draws a nominal 350 watts from the power line; a significant factor in reducing operational costs, especially in continuous-duty installations.

Vacuum tubes have been reduced to five types and new, long-life rectifier tubes are used. All tubes can be replaced without removing the outside cover. *The 1570B is designed for rack, cabinet, or shelf mounting, without the use of adapters. A convective heat-dissipation system is part of the amplifier design. Externally-mounted barrier terminal strips are provided for accommodating all connections.

A micro switch interlock on the power and rectifier tube compartment reduces shock hazard. Other features include the easy-to-service R-C board construction and hermetically-sealed, high-temperature selenium rectifiers.

An exclusive protective device which protects equipment and continuity of operation is incorporated in the 1570B. This device automatically reduces the line voltage at the equipment whenever the temperature rises dangerously due to any cause, such as high line voltage, excessive ambient temperature or other, and allows continued operation at reduced power.

The 1570B, with its many valuable engineering and operational features, is the obvious choice for economy, reliability, and quality in public address, sound distribution, and music systems requiring from 100 to 175 watts of power.

*When more than one 1570B Amplifier is mounted in a standard rack or cabinet, Altec 10399 Perforated Panel may be used to separate the units and facilitate ventilation.

PERFORMANCE AND SPECIFICATION DATA ON REVERSE SIDE

ALTEC LANSING®

A Division of LTV Ling Altec, Inc.

1515 S. Manchester Ave., Anaheim, Calif.

New York

ALTEC 1570B

SPECIFICATIONS

Type:	Power Amplifier
Gain:	72 db
Input Sensitivity:	1.0 volt rms for rated output
Power Output:	175 watts at less than 5% thd, 65-20,000 cps 165 watts at less than 3% thd, 70-10,000 cps
Frequency Response:	±1.0 db, 10-50,000 cps
Input Impedance:	70,000 ohm potentiometer
Source Impedance:	150, 600 ohms with 15095 Plug-in Transformer
Load Impedance:	8 (35v), 16 (50v), 32 (70v) ohms
Output Impedance:	Less than 10% of nominal load impedance
Noise Level:	Output noise: —25 dbm: 77 db below rated output
Controls:	Volume control, continuously variable composition
Power Supply:	105-130 volts, 60 cps, 350 watts
Tubes:	1—12AX7, 1—6SN7GTB, 2—6W6GT, 2—811-A, 4—5R4GY
Dimensions:	10½" H, 19" W, 13½" D
Color:	Green
Weight:	59 lbs.

ACCESSORIES

See "Power Amplifier Accessories" sheet for: 15095 Plug-in Transformer

ARCHITECTS AND ENGINEERS SPECIFICATIONS

The amplifier shall be designed for either rack, cabinet, or shelf mounting measuring not less than 10½" H, 19" W, and 13½" D. This amplifier shall have an input sensitivity of 1.0 v rms for rated output, and shall provide a continuously variable volume control, a pilot light, and on-off switch on the front panel.

The power output shall be 165 watts with less than 3% total harmonic distortion over the frequency range of 70 to 10,000 cps, and 175 watts at less than 5% total harmonic distortion from 65 to 20,000 cps. The frequency response of the amplifier shall be within ± 1.0 db from 10 to 50,000 cps. Output noise shall be no greater than —25 dbm: 77 db below rated output, and over-all gain shall be no less than 72 db.

The output impedance shall be less than 10% of nominal load impedance, which shall be 8 (35 v), 16 (50 v), 32 (70 v) ohms.

The input impedance shall be 70,000 ohm potentiometer, with source impedances of 150 and 600 accommodated by an accessory plug-in transformer.

The power amplifier shall operate from 105 to 130 v, 60 cycles, and its line-power rating (per UL standards) shall not exceed 350 w. The tube complement shall be one 12AX7, one 6SN7GTB, two 6W6GT, two 811-A, and four 5R4GY. The unit shall be finished in green and shall weigh in the order of 59 lbs.

The amplifier shall be equipped with a protective device which shall automatically reduce the primary voltage to the power transformer, by an amount that permits the amplifier to continue operating, when the temperature of the equipment rises.

Any amplifier which does not have a tertiary winding on the output transformer to permit isolation of the load circuit from ground shall not be deemed acceptable under these specifications.

The amplifier shall be Altec Lansing Model 1570B.

NOTICE

We recommend that you obtain your Altec products from factory trained authorized Altec Sound Contractors and Distributors. This will assure you of proper installation, a continuing source of knowledgeable advice, service, and quick warranty protection.

Litho in USA. CP 4/66

1570B AMPLIFIER

OPERATING INSTRUCTIONS

SPECIFICATIONS

Type:	Power Amplifier
Gain:	72 db
Input Sensitivity:	1.0 volt rms for rated output
Power Output:	175 watts at less than 5% thd, 65-20,000 cps 165 watts at less than 3% thd, 70-10,000 cps
Frequency Response:	±1.0 db, 10-50,000 cps
Input Impedance:	70,000 ohm potentiometer
Source Impedance:	150, 600 ohms with 15095 Plug-in Transformer
Load Impedance:	8 (35v), 16 (50 v), 32 (70 v) ohms
Output Impedance:	Less than 10% of nominal load impedance
Noise Level:	Output noise —25 dbm: 77 db below rated output
Controls:	Volume control, continuously variable composition
Power Supply:	105-130 volts, 60 cps, 350 watts
Tubes:	1—12AX7, 1—6SN7GTB, 2—6W6GT, 2—811-A, 4—5R4GY
Dimensions:	10½" H, 19" W, 13½" D
Color:	Green
Weight:	59 lbs.
Accessories:	15095 Plug-in Transformer 10399 Panel

A Division of LTV Ling Altec, Inc.
©Altec Lansing

1515 S. Manchester Ave., Anaheim, Calif.
New York

12969-1 PRICE $ .14

LITHO IN U.S.A. 11/65

GENERAL DESCRIPTION

The 1570B Amplifier is a compact, high quality, 165 watt power amplifier designed for public address applications, either shelf or rack mount. Rack mounting occupies six units (10½") of rack space. Negative feedback is carried around all stages from a tertiary winding on the heavy duty output transformer, permitting the output to feed an ungrounded load or a load with one side grounded. This amplifier is designed for stable 70 volt line operation under all output load conditions without impairment of program quality. Power switch, pilot light and gain control are located on the front of the amplifier and the input and output terminals, in the form of barrier type terminal blocks, are mounted on the rear. A six-foot three-wire power cord, terminating in a three-pin cap, is standard equipment with this amplifier.

A special protective device is incorporated in the 1570B in the form of a thermal circuit breaker shunted by a power resistor, the combination being in series with one side of the power transformer primary. The breaker is fastened to the amplifier chassis so that heat from the latter is transferred to the breaker thermal element. AC line current through the breaker also heats the thermal element. Abnormal heating of the chassis and abnormal line current will make the breaker contacts open, inserting the power resistor in series with the power transformer primary reducing the voltage to it. Program service is thus maintained at reduced power. The breaker being an automatic reset type, reduction in line current and chassis temperature will allow it to close and restore full line voltage to the power transformer. Cycling will continue until the abnormal condition is corrected. Locating the amplifier in an inadequately ventilated, high ambient temperature zone will result in excessive heating. Overdriving the amplifier due to a mismatch of load to amplifier output will result in abnormal line current.

INSTALLATION

When mounting 1570B Amplifiers in a standard rack or cabinet rack, use a minimum of one rack unit (1¾") spacing between amplifiers and fill space with the 10399 perforated panel. When cabinet racks are used, a blower of approximately 40 cfm capacity should be installed on top of the cabinet to exhaust hot air from within the cabinet. Fresh air is thus drawn into the amplifier chassis through the front grill openings.

INPUT CONNECTIONS

Two pairs of input terminals are provided. Terminals 1 and 2, which connect directly to the input potentiometer, are provided for unbalanced high impedance sources or for bridging unbalanced low impedance lines having a signal voltage of 1 volt or more. Terminals 3 and 4 connect to a standard octal socket which permits low impedance input from balanced or unbalanced lines of 150 or 600 ohms with the accessory 15095 (plug-in) Line Transformer. The socket is connected for 600 ohm operation as shipped. The 150 ohm input is obtained by strapping the socket terminals as shown on the schematic. Both inputs may be used simultaneously provided the input to 1 and 2 is built out with a 100,000 ohm resistor in series with the high side of the line to prevent excessive loading or shorting of the low impedance input.

OUTPUT CONNECTIONS

Output taps for nominal loads of 8, 16, and 32 ohms (70 volt line) are provided. Connections and strapping are shown below.

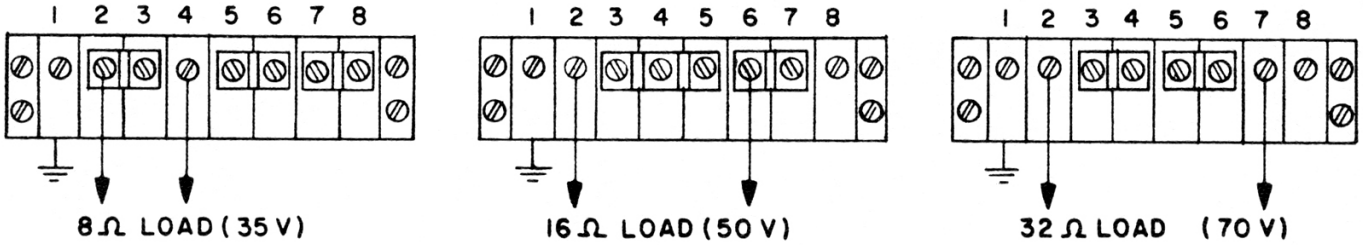

Speaker Matching: Use the output tap which most nearly equals the total speaker impedance. If the load impedance falls between two output tap values, use the lower tap.

70 Volt Line: The constant voltage distribution system (70 volt line) permits connection of a large number of speakers, each to operate at the power level desired, without regard for the impedance involved. In this system, each speaker is equipped with a transformer which has a number of taps rated in terms of power and the tap is selected which gives the desired speaker power. The total power requird for the speakers should be equal to or less than the amplifier power rating.

Protection of Horn Loaded Drivers: In industrial paging systems, stadium, arena or other voice reinforcing systems which require excellent intelligibility over high noise levels, diaphragm type driver units coupled to horns are used. When these are used without loudspeaker dividing networks (used in two-way speaker systems), the low frequency energy applied to the driver voice coils must be limited. This protection is provided in the 1570B Amplifier by means of an R-C high pass filter in V-1 grid circuit (see schematic). As shipped, capacitors C9 and C10 are strapped out. By cutting one or both of these straps attenuation is introduced as shown in the table, depending on the impedance of the source.

Source Impedance	Cut Strap	cps 250	500	1000	2000
100,000 Ohm	B	−4.0 db	−1.5 db	−.5 db	−.2 db
	A	−3.0	−1.0	−.3	−.2
	A and B	−7.0	−2.5	−.8	−.3
Low (Approximately correct to 15,000 ohms)	B	−5.2	−2.0	−.7	−.2
	A	−8.5	−4.0	−1.5	−.5
	A and B	−12.5	−6.2	−2.5	−.7

POWER CONNECTIONS

The power transformer of the 1570B Amplifier has primary taps for 117 and 128 volts and is shipped with the 128 volt tap (white lead) connected. Use of the 128 volt tap for all line conditions will extend component and tube life, reducing maintenance to a minimum. Do not connect the 117 volt tap unless 24-hour line checks show that the line does not exceed 117 volts. For your convenience, these two leads are equipped with ring type terminals, the one in use being connected to one terminal of the interlock microswitch and the unused terminal insulated with plastic tubing.

POWER OUTPUT

When making power output measurements, connect a jumper across the terminals of the thermal breaker. Continuous sine wave output in the full power range may operate the breaker, giving false readings, if the jumper is not used. In motor drive or other applications which require continuous sine wave full power output of the 1570B, the thermal breaker should likewise be bridged out of the circuit.

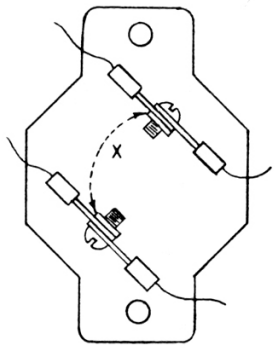

X-Shorting Jumper

CONTROLS

Two controls are provided: Volume control and AC power switch. Provision has been made for mounting an accessory relay to provide plate power keying by remote control. The mounting holes are located near the center of the chassis and are suitable for a Potter-Brumfield type PR-3 relay or equivalent which should be mounted under the chassis. Select a relay having the desired coil voltage. If control wiring and microphone lines are carried in the same conduit, use a DC type relay. The white wire from the cable form to terminal 6 on V-9 tube socket should be transferred from this terminal to one contact on the relay. Connect the other relay contact to terminal 6, V-9 socket.

SERVICING

When the top cover is removed for tube replacement, etc., an interlock switch interrupts the AC line voltage to the power transformer. Do not attempt service work on this amplifier with AC line voltage on, as approximately 1,000 volt potentials occur at various points. Discharge all filter condensers before making continuity or resistance measurements. Routine servicing may then be done using the schematic for pertinent data reference. If high voltage measurements must be made, proceed with caution.

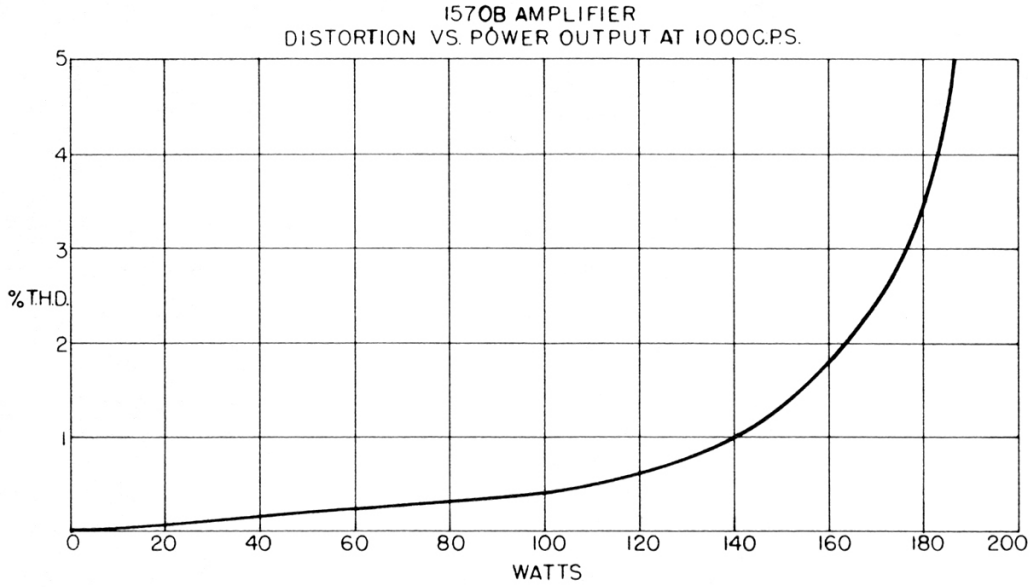

PARTS LIST

C1	.0002 mfd. ±10%, 600v ceramic, Erie GP2-331	R18	75,000 ohms, 20 watt, Ohmite Brown Devil
C2, 3	.22 mfd., 400v, Astron BP4-22	R19	5 ohms, 50 watt, Ohmite 0400A
C4, 5	.1 mfd., 600v, CD PM6 P 1	R20	10 ohms ±10%, ½ watt
C6	40x40 mfd., 500v, Mallory FP288	P1	Altec Lansing 12435
C7, 11	120 mfd., 200v, Mallory FP121	BR1	Klixon CA3 Thermal Breaker
C8	6 mfd., 1000v, Tobe-Deutchmann TAB-1006	PL1	G.E. Mazda #44
C9	,0056 mfd. ±10%, 600 v ceramic, Erie 811	T1	Peerless 16492
C10	.0022 mfd. ±10%, 600v ceramic, Erie GP-2	T2	Peerless 6410
R1	1000 ohms ±10%, ½ watt	L1	Peerless 17173
R2	330,000 ohms ± 5%, 1 watt	L2	Peerless 17266
R3, 21	100,000 ohms ±10%, ½ watt	S1	Altec Lansing 12763
R4, 5, 9, 10, 17	100,000 ohms ±10%, 1 watt	S2	Interlock, V3-1 Microswitch
R6, 7	2.2 megohms ±10%, ½ watt	RS1, 2	G.E. 1N1695 Silicon Rectifier
R8	1800 ohms ±10%, ½ watt	V1	12AX7 Vacuum Tube
R11, 12	330,000 ohms ±10%, ½ watt	V2	6SN7GTB Vacuum Tube
R13	82,000 ohms ±10%, ½ watt	V3, 4	6W6GT Vacuum Tube
R14	600 ohms, 5 watt, Ward Leonard Type 5	V5, 6	811-A Vacuum Tube
R15, 16	100 ohms ±10%, ½ watt	V7, 8, 9, 10	5R4GY Vacuum Tube

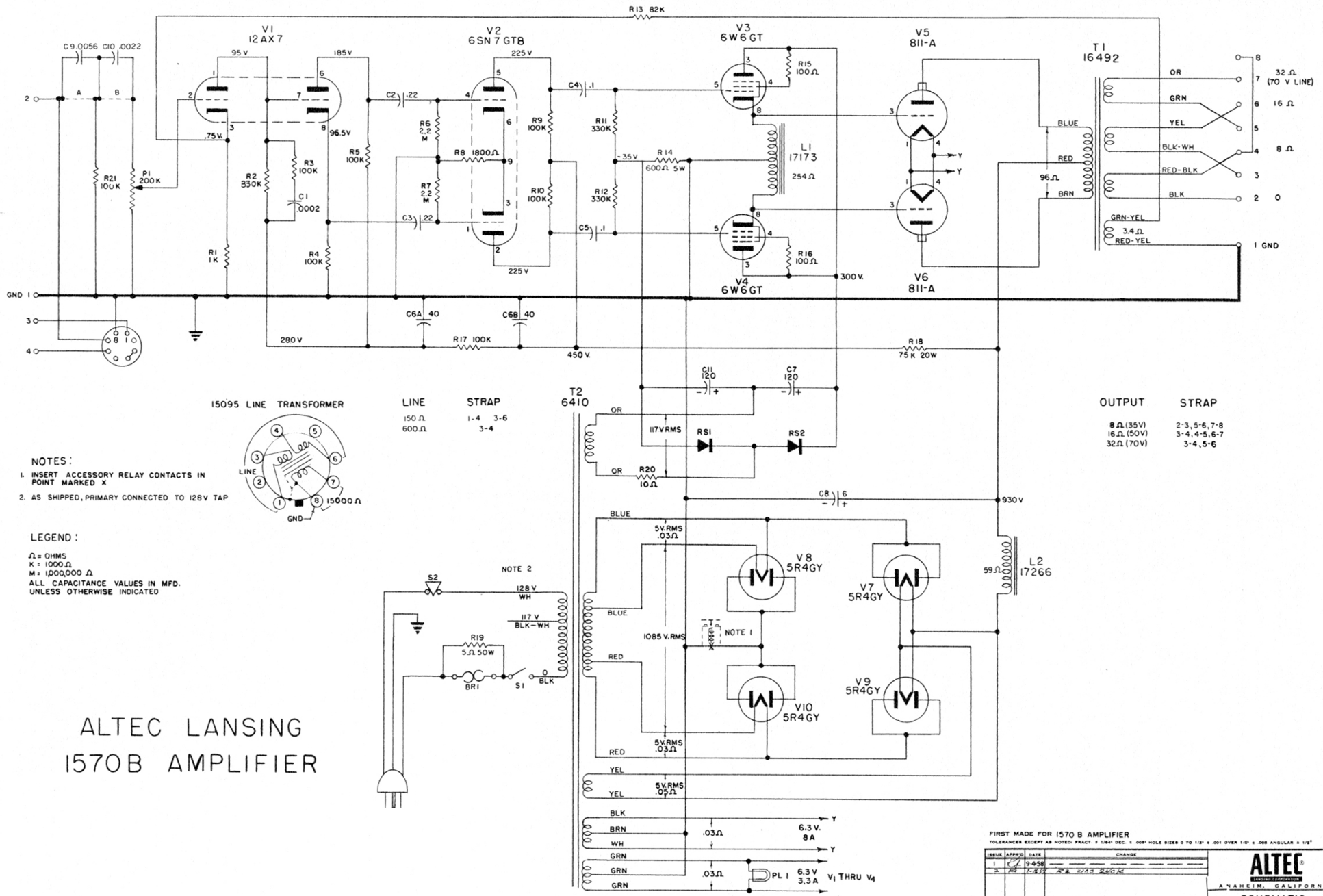

15095 LINE TRANSFORMER

LINE	STRAP
150 Ω	1-4 3-6
600 Ω	3-4

OUTPUT	STRAP
8 Ω (35V)	2-3, 5-6, 7-8
16 Ω (50V)	3-4, 4-5, 6-7
32 Ω (70V)	3-4, 5-6

NOTES:

1. INSERT ACCESSORY RELAY CONTACTS IN POINT MARKED X
2. AS SHIPPED, PRIMARY CONNECTED TO 128V TAP

LEGEND:

Ω = OHMS
K = 1000 Ω
M = 1,000,000 Ω
ALL CAPACITANCE VALUES IN MFD. UNLESS OTHERWISE INDICATED

ALTEC LANSING 1570B AMPLIFIER

FIRST MADE FOR 1570 B AMPLIFIER

TOLERANCES EXCEPT AS NOTED: FRACT. ± 1/64" DEC. ± .005" HOLE SIZES 0 TO 1/2" ± .001 OVER 1/2" ± .005 ANGULAR ± 1/2°

ISSUE	APPR'D	DATE	CHANGE
1	[illegible]	9-4-58	
2	[illegible]	1-16-59	R2 WAS 240K

ALTEC LANSING CORPORATION
ANAHEIM, CALIFORNIA

SCHEMATIC
1570 B AMPLIFIER

DR. BY ED GOLKA

6697-2